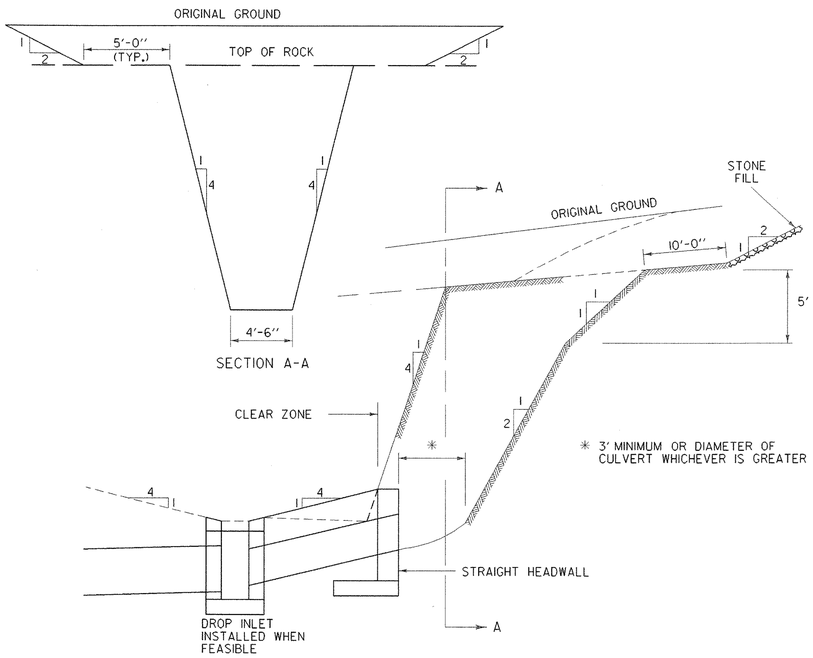

TYPICAL WATERFALL FOR CULVERTS

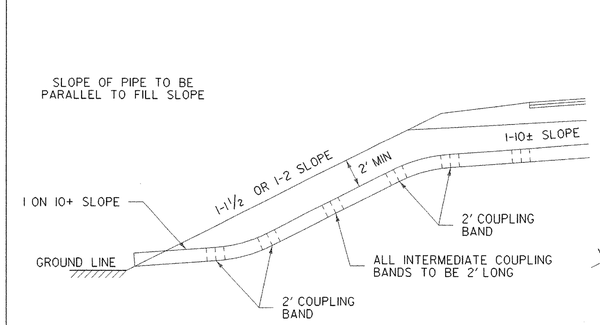

TYPICAL APPLICATION OF CORRUGATED ELBOW ON HIGH FILL

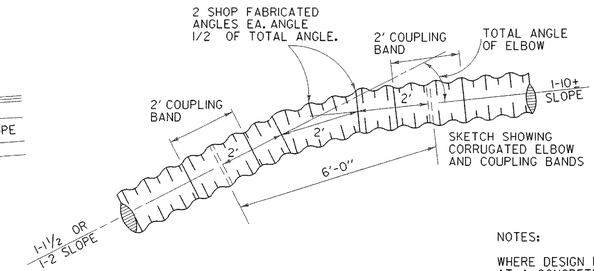

CORRUGATED PIPE ELBOW

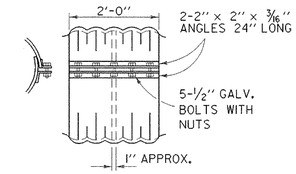

DETAILS FOR COUPLING BAND

NOTES:

WHERE DESIGN FOR SLOPE PIPE AND ELBOWS START AT A CONCRETE JUNCTION BOX OR DROP INLET, DESIGN TO BE SUCH AS TO PERMIT A 2' LONG SECTION OF PIPE THRU THE STRUCTURE WALL TO WHICH THE CORRUGATED ELBOW WILL BE ATTACHED.

COUPLING BANDS 1'-9" LONG MAY BE USED IN CONJUNCTION WITH PIPE FABRICATED WITH HELICAL CORRUGATIONS IN PLACE OF CIRCUMFERENTIAL CORRUGATED BANDS 2' LONG.

BANDS CONFORMING TO SECTION 711 AND EQUIPPED WITH SILO RODS OR CABLES FOR POSITIVE ATTACHMENT MAY ALSO BE USED IN LIEU OF THE COUPLING BAND SHOWN.

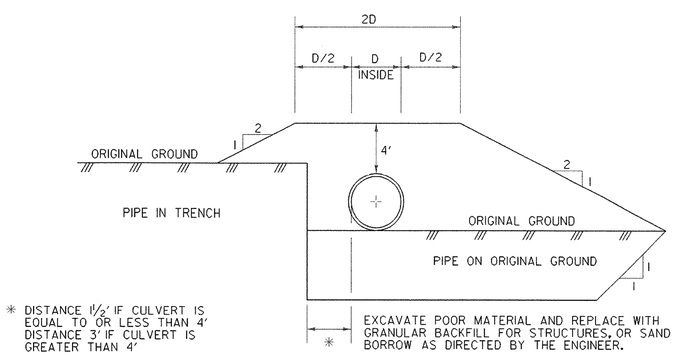

GRANULAR MATERIAL AT METAL CULVERT LOCATIONS
(MAX SIZE CULVERT 10')

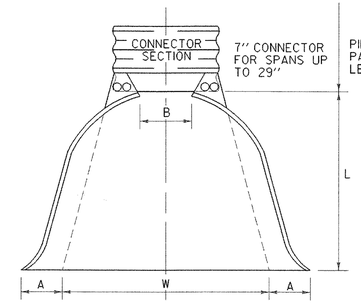

PLAN

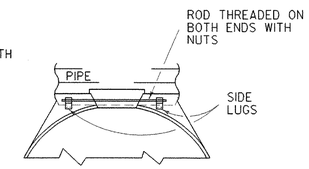

FOR 18" x 11" THRU 29" x 18"

TOE PLATE TO BE PUNCHED TO MATCH HOLES IN SKIRT LIP. 3/8" GALV. BOLTS TO BE FURNISHED. LENGTH OF TOE PLATE W+10" FOR PIPE ARCHES WITH RISE 11" TO 18" INCL.

SKIRT SECTION FOR PIPE-ARCHES WITH RISE OF 11" TO 18" INCL. TO BE MADE IN ONE PIECE.

CONNECTOR SECTION, CORNER PLATE, AND TOE PLATE TO BE SAME GAUGE AS SKIRT.

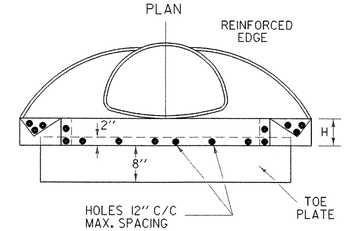

ELEVATION

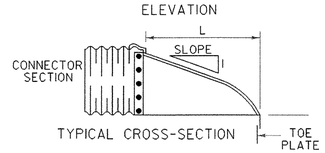

TYPICAL CROSS-SECTION

PIPE ARCH DIMENSIONS		THICK	DIMENSIONS					APP. SLOPE	BODY
SPAN	RISE		A 1" ±	B MAX.	H 1" ±	L 1½" ±	W 2" ±		
18	11	.064	7	9	6	19	30	2½	1 PC
22	13	.064	7	10	6	23	36	2½	1 PC
29	18	.064	9	14	6	32	48	2½	1 PC

CORRUGATED PIPE ARCH END SECTION

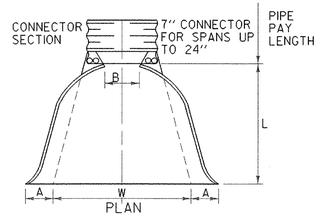

PLAN

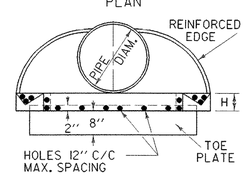

ELEVATION

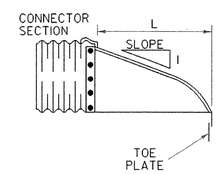

TYPICAL CROSS-SECTION

ALTERNATE CONNECTIONS

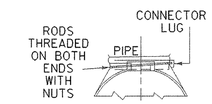

FOR 12" THRU 24"

TOE PLATE TO BE PUNCHED TO MATCH HOLES IN SKIRT LIP. 3/8" GALVANIZED BOLTS TO BE FURNISHED. LENGTH OF TOE PLATE IS W+10" FOR 12" TO 24" DIA. PIPE INCL.

SKIRT SECTION FOR 12" TO 24" DIAMETER PIPE INCL. TO BE MADE IN ONE PIECE.

CONNECTOR SECTION, CORNER PLATE, AND TOE PLATE TO BE SAME GAUGE AS SKIRT.

PIPE DIAM.	THICK	DIMENSIONS					APP. SLOPE	BODY
		A 1" ±	B MAX.	H 1" ±	L 1½" ±	W 2" ±		
12	.064	6	6	6	21	24	2½	1 PC
15	.064	7	8	6	26	30	2½	1 PC
18	.064	8	10	6	31	36	2½	1 PC
21	.064	9	12	6	36	42	2½	1 PC
24	.064	10	13	6	41	48	2½	1 PC

CORRUGATED PIPE END SECTION

NOT TO SCALE

REVISIONS AND CORRECTIONS

DEC. 6, 1971 - ORIGINAL APPROVAL DATE.
JULY 24, 1975 - GRANULAR MATERIAL AT CULVERT LOCATIONS CORRECTED.
OCT. 30, 1985 - REVISED TO CONFORM TO 1986 SPECIFICATIONS.
JUNE 1, 1994 - REISSUED, WITHOUT CHANGE, UNDER NEW SIGNATURES.
AUG 13, 2007 - MINOR CORRECTIONS & REVISIONS DELETED EXTERIOR SERVICE BOX AND CURB STOP, MOVED UNDERDRAIN RISER TO STD D-30.

APPROVED

Kevin S. Marchio
ROADWAY, TRAFFIC & SAFETY ENGINEER

Richard Tetreault
DIRECTOR OF PROGRAM DEVELOPMENT

Mark D. Richter
FEDERAL HIGHWAY ADMINISTRATION

CORRUGATED PIPE END SECTION, ARCH END SECTION, AND ELBOW
GRANULAR MATERIAL AT METAL CULVERT LOCATIONS
TYPICAL WATERFALL FOR CULVERTS

VERMONT AGENCY OF TRANSPORTATION

STANDARD
D-4